OA-60-475

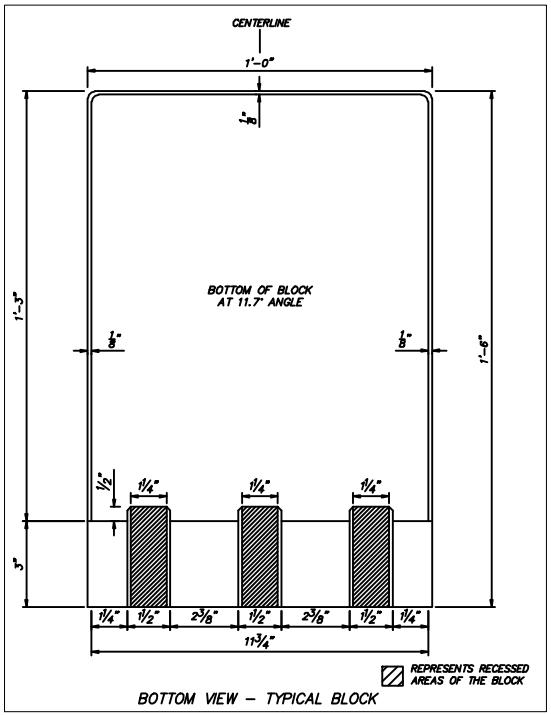

BOTTOM VIEW – TYPICAL BLOCK

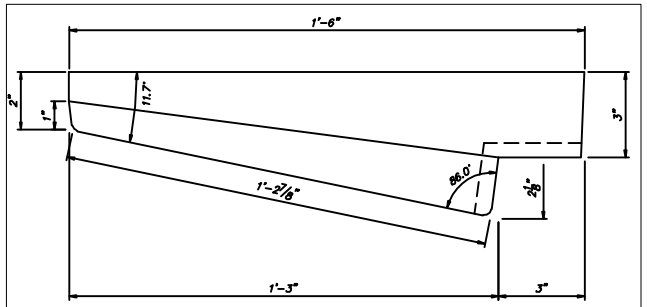

SIDE VIEW – TYPICAL BLOCK

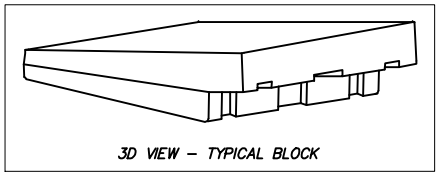

3D VIEW – TYPICAL BLOCK

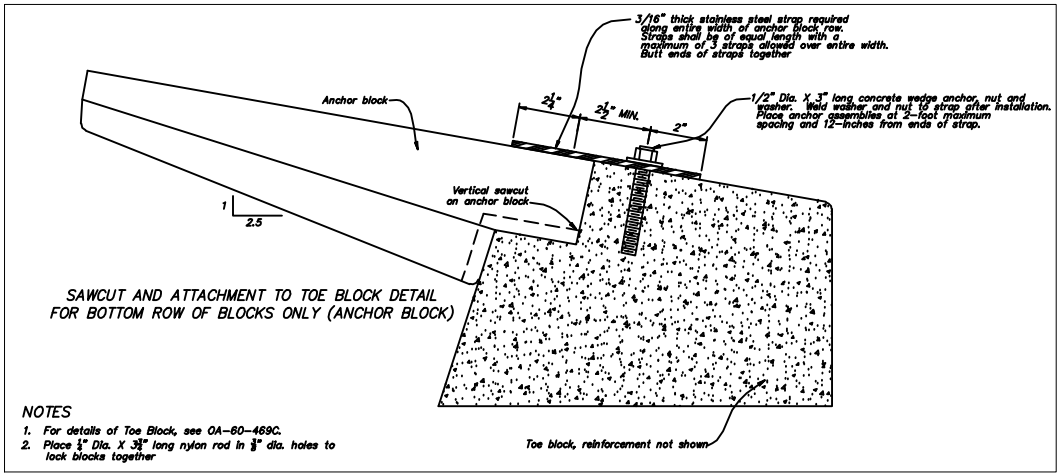

SAWCUT AND ATTACHMENT TO TOE BLOCK DETAIL
FOR BOTTOM ROW OF BLOCKS ONLY (ANCHOR BLOCK)

NOTES

1. For details of Toe Block, see OA-60-469C.
2. Place 1/4" Dia. X 3 3/4" long nylon rod in 3/8" dia. holes to lock blocks together

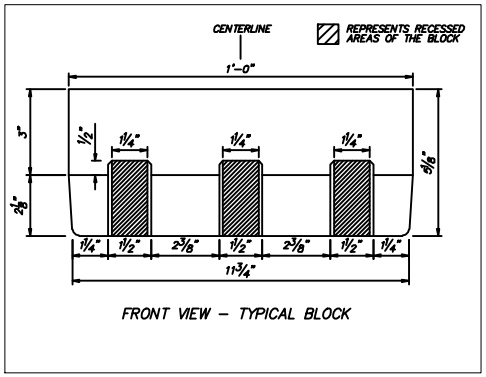

FRONT VIEW – TYPICAL BLOCK

ALWAYS THINK SAFETY

UNITED STATES
DEPARTMENT OF THE INTERIOR
BUREAU OF RECLAMATION

BATTLE CREEK SALMON AND STEELHEAD RESTORATION PROJECT–CALIF.
HYDROPOWER FACILITY MODIFICATIONS

SOUTH POWERHOUSE
DIKE AND PRECAST CONCRETE BLOCK WALL
ARMORWEDGE BLOCK DETAILS

DESIGNED KATHLEEN H. FRIZELL CHECKED TRACY B. VERMEYEN
DRAWN RUDY CAMPBELL TECH. APPROVAL TRACY B. VERMEYEN
APPROVED
FIELD DESIGN
CADD SYSTEM AutoCAD Rel. 16.0a
CADD FILENAME OA-60-475.DWG
DENVER, COLORADO MAY 8, 2002

OA-60-475

SOLICITATION NO. 20-C0550

FILE PATH: C:\JPSave\JP\Projects\Battlecreek\Wedge Block
PLOTTED BY: RCAMPBELL
MAY 10, 2005 13:12